DIFFERENTIAL PRESSURE GAUGE DPH300

Weather Proof, Diaphragm Type, Combine With Switch Available
Range Available: 0 - 0.05 - 0.4kg/cm² (0 - 500 - 4000mmH₂O)

DPH300 series consist of high and low pressure ports. Spring and diaphragm as well as magnet couple with pointer. Differential pressure indicated on dial due to ΔP pressure of high side and low side be made from magnet couple with pointer.

Technical Data

Dial Size: DPH300-1 Indicating only: ø4", ø6" available
DPH300-2 With alarm switch: ø4 only
Housing Material: SS316 for DPH300-1; Aluminum alloy for DPH300-2
Housing Protection: IP66
Accuracy: ±2% F.S (on rising pressure)
Switch Data: One SPDT micro switch, 5A/125VAC, 5A/250VAC, 2A/30VDC; Dead Band ±12%
Pressure Element: Diaphragm- Viton; other parts all in SS316
Electronic Connection: Standard ½"NPT female, and ¾"NPT female available
Process Connection: ½" or ¼"NPT female
Working Pressure: 100 kg/cm² (Both of High & Low side must be pressured on line at the same time.)
Working Temperature: max. 80°C

Approvals:

Patent No.

M449263
China: ZL 2012 2 0666839.5

Switches with UL & CSA Recognized and File No. E41515.

Dimensions-mm

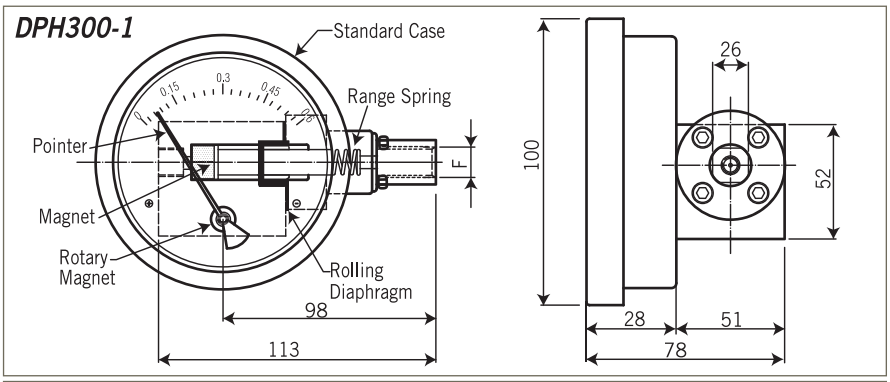

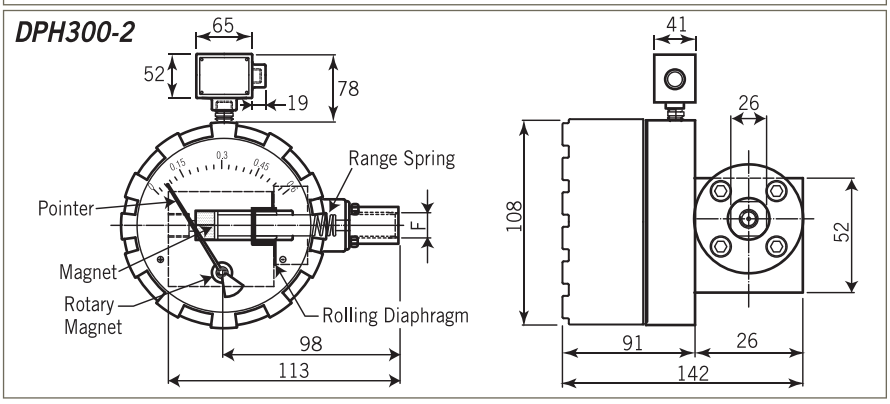

Range Selection Table

Code	Range		Maximum D/P Pressure Proof
01R	0.7 psi	0~0.050 kg/cm²	5 psi
02R	1.1 psi	0~0.075 kg/cm²	5 psi
03R	1.5 psi	0~0.10 kg/cm²	5 psi
04R	2.3 psi	0~0.16 kg/cm²	5 psi
05R	3.0 psi	0~0.20 kg/cm²	5 psi
06R	3.6 psi	0~0.25 kg/cm²	5 psi
07R	5.7 psi	0~0.40 kg/cm²	5 psi

NOTE.
If you need Flow Scale, please contact with factory.

Ordering Information

DPH300	Code	Dial Size / Type / Case Material
		(A) ø4" / DPH300-1: Indicating only / SS316 **(B)** ø6" / DPH300-1: Indicating only / SS316
		(C) ø4" / DPH300-2: With alarm switch / Aluminum alloy

Code	Range
	(01R) 0~0.05 kg/cm² **(02R)** 0~0.075 kg/cm² **(03R)** 0~0.1 kg/cm² **(04R)** 0~0.16 kg/cm² **(05R)** 0~0.2 kg/cm² **(06R)** 0~0.25 kg/cm² **(07R)** 0~0.4 kg/cm²

Code	Wetted Parts Material
A	SS316

Code	Process Connection
	(1) ½"NPT Female **(2)** ¼"NPT Female

Code	Control Form		
1	One SPDT	N	Without (for DPH300-1)

Code	Conduit Size				
A	½"NPT(F), standard	B	¾"NPT(F)	N	Wihtout (for DPH300-1)

DPH300							Complete Ordering Code