CLAMP CONNECTION TYPE DIAPHRAGM SEAL

DT106

DT106 sanitary diaphragm seal is designed to be used in food, beverage industry and pharmaceutical industry. It is easy to assemble with pressure gauges, pressure switches and pressure instruments.

Technical Data

Instrument connection: female thread ¼" to ½" BSP or NPT
Process connection: 1", 1½", 2" (ISO2852), 25, 32, 40, 50 (DIN32676)
Temperature limited: -40~+150℃
Pressure range limited: (for pressure gauge)

Size	Minimum Limited	Maximum Limited	Membrane Size	On Request
1" & 1½"	0~6 Kg/cm²	0~40 Kg/cm²	ø36mm	ø22mm
2"	-1~1.5 Kg/cm²	0~16 Kg/cm²	ø51.8mm	

Material: Body– SS316 (standard); options– SS316L, Hastelloy C276, and others available on request
Membrane: SS316L (standard); Options– Hastelloy C276, tantalum, titanium and others on request.

Approvals:

Dimensions

Item	Description of Parts
a	Upper housing
b	Filing port
c	Membrane
d	Instrument connection

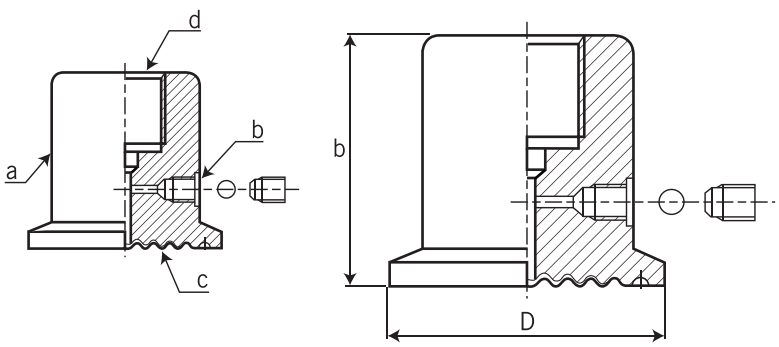

Dimensional Data

ISO	b	D
1"	37	50.5
1½"	37	50.5
2"	37	64

DIN	b	D
25	37	50.5
32	37	50.5
40	37	50.5
50	45	64

unit=mm

Ordering Information

DT106	Code	Instrument Connection (Female)
		(A) ¼"BSP (B) ¼"NPT (C) ⅜"BSP (D) ⅜"NPT (E) ½"BSP (F) ½"NPT

Code	Process connection type
ISO	ISO2852
DIN	DIN32676

Code	Process connection rating
ISO	(1) 1" (2) 1½" (3) 2"
DIN	(4) 25 (5) 32 (6) 40 (7) 50

Code	Body material
	(S) SS316 (0) Option

Code	Membrane material
	(1) SS316L (2) Hastelloy C276 (3) Tantalum (4) Option

Code	Pressure Range
	(0) Diaphragm seal only (R) Directly fill out pressure gauge

Code	Membrnae Size
	(A) ø36 (B) ø51.8 (C) ø22 (on request)

DT106								Complete ordering code

WWW.NEW-FLOW.COM • TEL: 886-7-8135500 • FAX: 886-7-8225588 • Email: info@new-flow.com