FLANGE TYPE DIAPHRAGM SEAL

DT123 –Teflon Lining Type

DT123 diaphragm seal is designed to be used in highly viscous process media such as pulp, paper, waste water treatment, and plastic/ chemical process industries. DT123 is easy to assemble with pressure gauges, pressure switches, and pressure instruments.

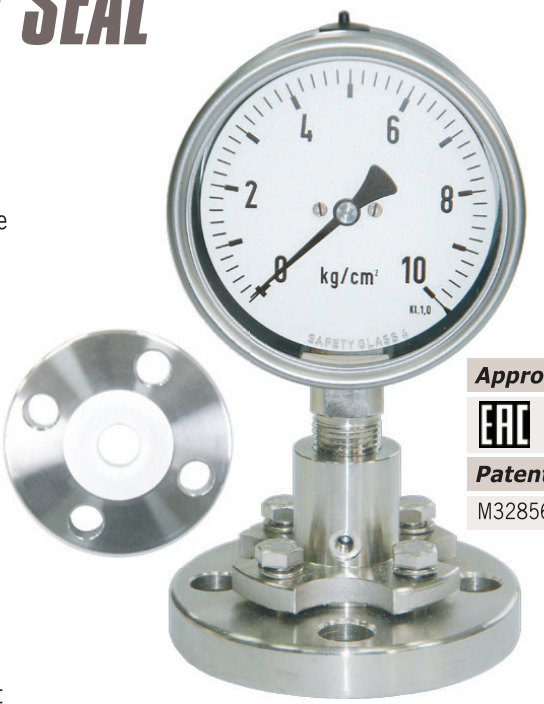

Approvals:

Patent No.
M328561

Technical Data

Instrument connection: female thread ¼" to ½" BSP or NPT
Membrane size: Ø36, Ø45, Ø75 available
Process connection: ½" to 3" Flange, JIS, ANSI, DIN available
Temperature limited: -40~+150℃
Pressure range limited:
Ø75 Membrane: -760 mmHg~0, Minimum process flange 2" x 150#
Ø45 Membrane: Maximum up to 40 kg/cm²
Minimum -1~5 kg/cm², 0~6 kg/cm²
Minimum process flange ¾" x 150#
Ø36 Membrane: Maximum up to 40 kg/cm²
Minimum 0~10 kg/cm²
Minimum process flange ½" x 150#
Material: Upper & Lower housing- SS316(standard), others on request
Membrane: SS316L+Teflon lining (standard); Options– Hastelloy C276, tantalum, and others on request.

Dimensions

Item	Description of Parts
a	Upper housing
b	Lower housing
c	Membrane
d	Instrument connection
e	Filling port
f	Screw bolt
T	Teflon lining

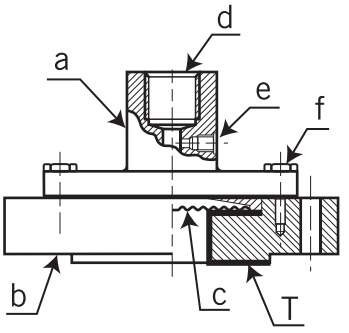

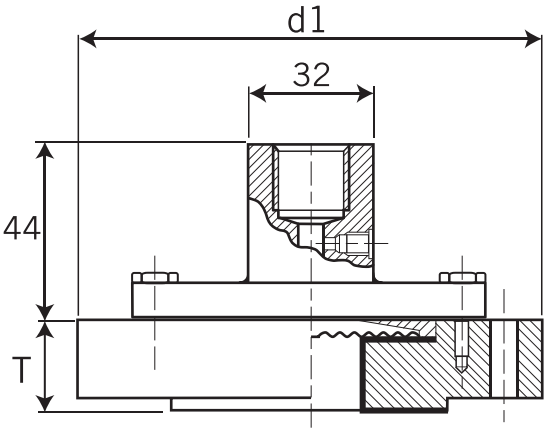

*The flange sizes of 1" to 4" are available upon request.
The dimensions are according to the standard specifications of JIS, ANSI and DIN.

unit=mm

Please note: d1 & T dimension are according to the flange rating and size.

Ordering Information

DT123	Code	Instrument Connection (Female)
		(A) ¼"BSP (B) ¼"NPT (C) ⅜"BSP (D) ⅜"NPT (E) ½"BSP (F) ½"NPT

Code	Membrane size
	(A) Ø36 (B) Ø45 (C)Ø75

Code	Process connection
	(1) ½" (2) ¾" (3) 1" (4) 1½" (5) 2" (6) 3" (7) Option

Code	Flange rating
	(1) 150# (2) 300# (3) PN16 (4) PN25 (5) JIS 10K (6) JIS 20K (7) Option

Code	Upper housing material
	(S) SS316 (standard) (O) Option

Code	Lower housing material
	(T) SS316+Teflon lining (O) Option

Code	Membrane material		
1	Option	2	Hastelloy C276+Teflon lining
3	Tantalum+Teflon lining	4	SS316L+Teflon lining

DT123								Complete ordering code

WWW.NEW-FLOW.COM • TEL: 886-7-8135500 • FAX: 886-7-8225588 • Email: info@new-flow.com