PADDLE WHEEL LIQUID FLOW METER

HF200

Technical Data

Connection Size: 1½"NPT female standard
Power Supply: 3.8V to 30VDC
Output: Sink(NPN) and 4~20mA available
Material:
Housing Case-Aluminum alloy [for output 4~20mA (4-wires) only]
Body- Polypropylene, PVDF available
Cover-PP, PVDF available
Rotor-PVDF
Shaft-HC 276
Bearings-PVDF
Housing Protection: IP68
O-Ring: Viton
Conduit Size: ½"NPT(F)
Max. Temperature: 70°C
Max. Pressure: Polypropylene: 10 kg/cm²
PVDF: 15 kg/cm²
Accurcy: ±2%F.S

Approvals:

EAC

Dimensions-mm

Code 1: Sink (NPN) Output

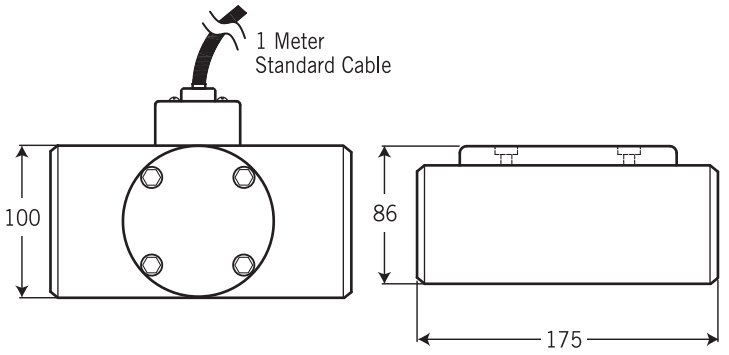

Code 2: 4~20mA (4-wires) Output

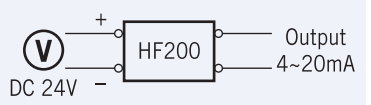

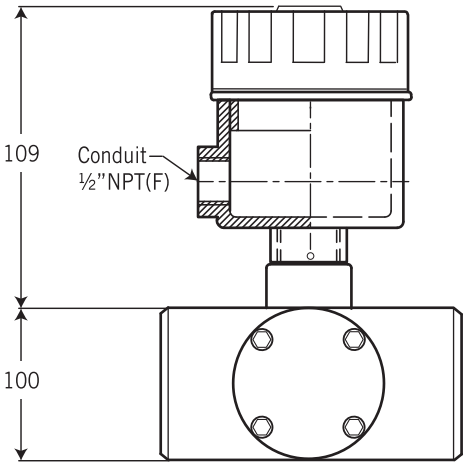

Range Table

SIZE	FLOW RATES (M³/H)	NOMINAL FACTORS PER LITER
1½"	1~10	7.1

Pressure Drop: 1½"

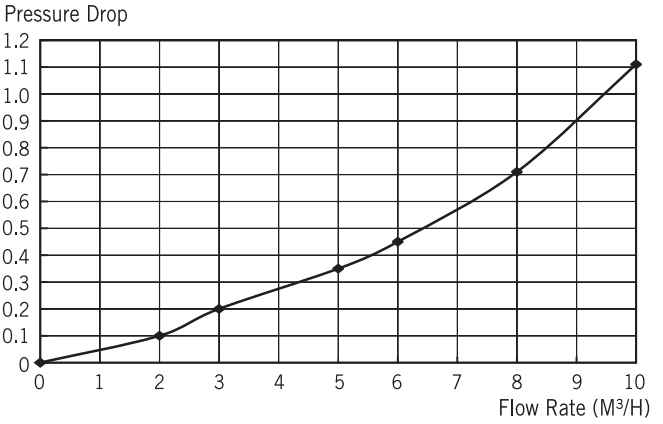

Ordering Information

HF200	Code	Process Connection Size
		(1) 1½"

Code	Body Material
A	Polypropylene
B	PVDF

Code	Cover Material
1	PP
2	PVDF

Code	Output
1	Sink (NPN) output
2	4~20mA output

HF200					Complete Ordering Code

WWW.NEW-FLOW.COM • TEL: 886-7-8135500 • FAX: 886-7-8225588 • Email: info@new-flow.com