FLOW SWITCH AND INDICATOR OF100 SERIES

Technical Data

Piston type for high viscosity
Fluid: Water, oil, other liquid available; Gases
Flow Range: 15~30,000 l/h (at Water); 0.4~740 Nm³/h (at Air)
Accuracy: ±3% F.S, On request: ±2.5% F.S
Size: ¼" to 2½"
Connetion Type: NPT, Flange type on request
Working Limits: Temperature: -40°C to +180°C
Working Pressure: 30 kg/cm²
Option–100 kg/cm² for 1" or less
Option–200 kg/cm² for 1½" or bigger
Protection Class: IP66, Explosion proof
Housing Material: NS, CS, MS type– Aluminum Alloy
ES type– SS316
Lens Material: Safety glass
Mounting: Veritcal, Horizontal available
Material: Wetted parts SS316; Teflon lining float for Gases application
Alarm Switch: Micro switch, Inductive switch available

NS Type (Indicating only)

CS Type (With inductive switch)

ES Type (Indicating only)

MS Type (With micro or reed switch)

Principle

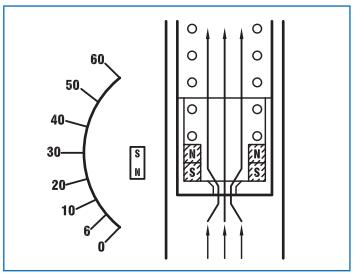

Approvals:

EAC Ex II2GD CE 2503

c UL Switches with UL & CSA Recognized and File No. E41515.

TD0400TJ
工電(2015)第00151號

Patent No.

Taiwan: M285697 / M338982 / M332836
China: 1187801

Dimensions

IP66 ES Type

Housing Material: SS316

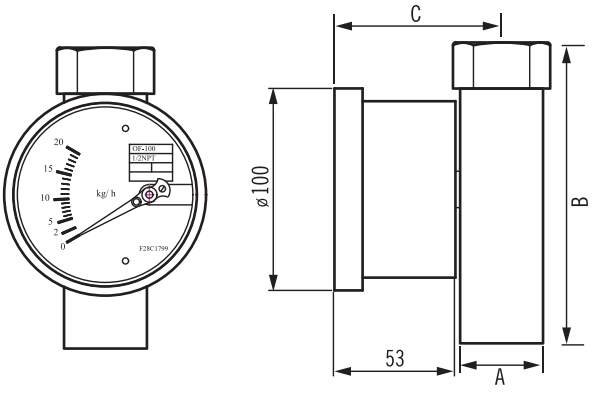

IP66 MS Type

Housing Material: Aluminum alloy

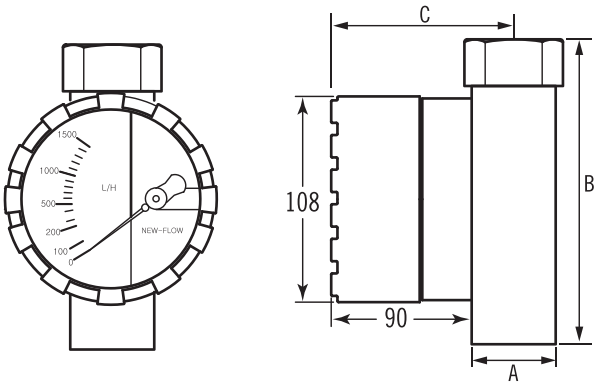

unit=mm

IP66 CS, NS Type

Housing Material: Aluminum alloy

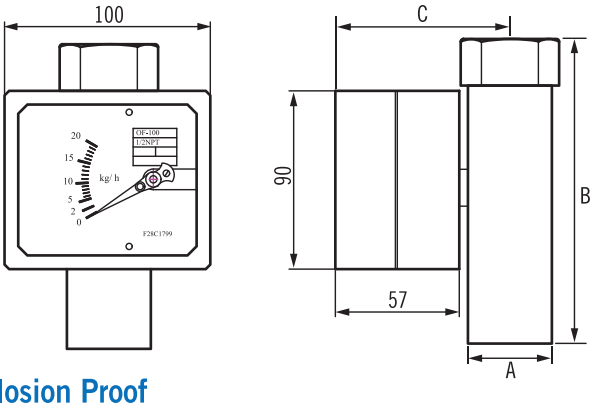

Explosion Proof

Housing Material: Aluminum alloy, SS316 available
- Explosion Proof Certificate on Housing Only
- Taiwan Explosion Proof Certification

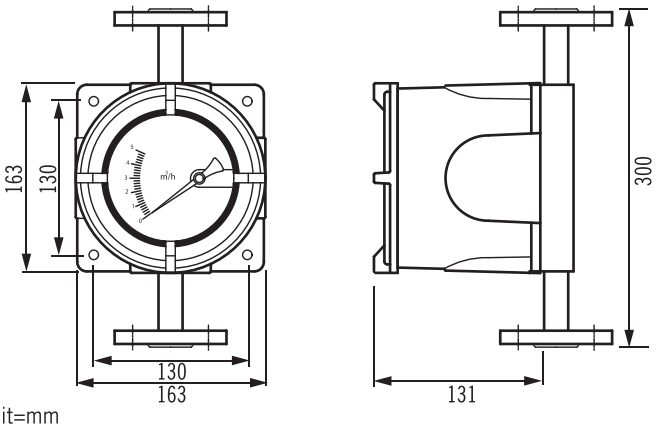

unit=mm

Alarm / Analog output

OF100–MS (Micro Switch)

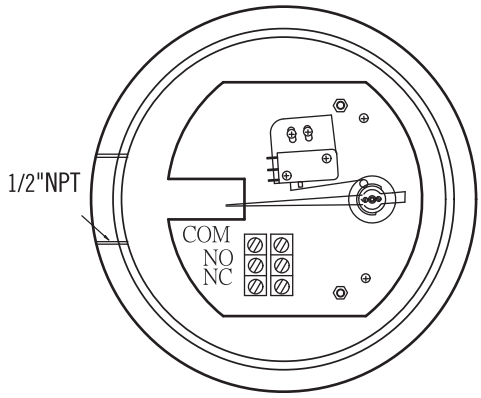

Adjustable Micro Switch, Series OF100-MS
1 adjustable alarm contact, or 2 adjustable alarm contact on request
Load: 5A/125VAC, 5A/250VAC, 2A/30VDC
Temperature: -25°C ~ +70°C (AMB)
Hysteresis: ±10% F.S (Dead Band)

OF100/GT (Analog Output)

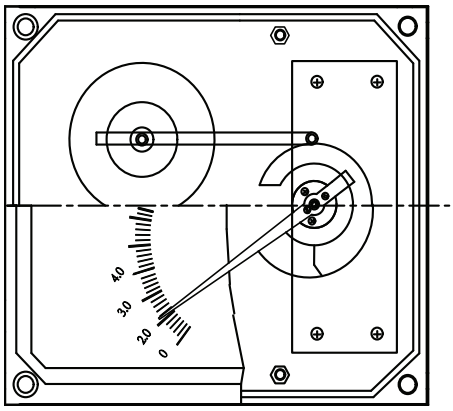

Electric Transmitter OF100/GT
Analog output available: 4~20mA (2 wire)
No Alarm Switch Available
Effective range within 20% to 100%
Power supplier: 24V dc
Temperature: -25°C ~ +70°C (AMB)

OF100–CS (Inductive Switch)

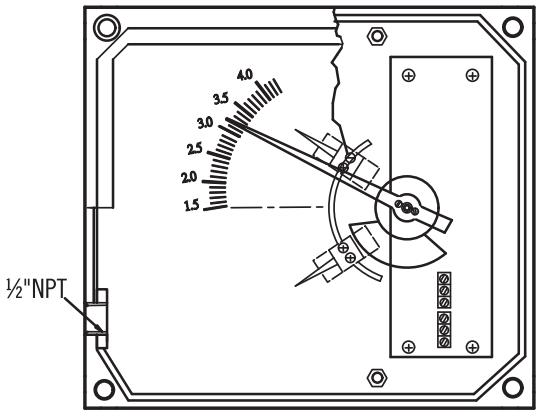

Adjustable inductive alarm switch
Hysteresis: ±2% F.S (Dead Band)
Inductive sensors slotted type:
3.5mm slot switch
DC. voltage 2 wire's to DIN19234 (NAMUR) for use in hazardous areas.
– Power supply: 8 Vdc (Ri.approx. 1kΩ)
– Current consumption: Active face uncoved 3mA
Active face coved 1mA
– Ambient temp: -25°C ~ +70°C

Isolated barriers output relay for inductive sensor:
– Rail mounting
– Control circuit EEx ia IIC
– EMC acc to NAMUR NE21
– Contact loading 250 VAC 2A SPDT 40 VDC 2A

1 adjustable alarm
Contact setting point should be within 20% to 100% of F.S

For 24VDC: KFD2-SR2-Ex1.W
115VAC: KFA5-SR2-Ex1.W
230VAC: KFA6-SR2-Ex1.W

2 adjustable alarm
The second setting point should be a gap 40% from first setting point.

For 24VDC: KFD2-SR2-Ex2.W
115VAC: KFA5-SR2-Ex2.W
230VAC: KFA6-SR2-Ex2.W

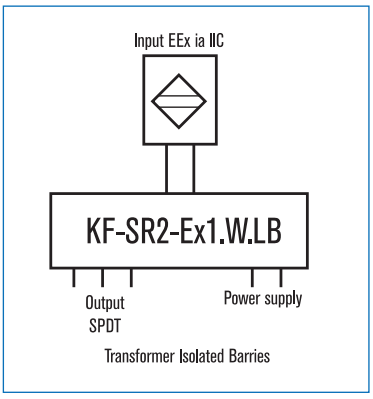

OF100–RS (Reed Switch)

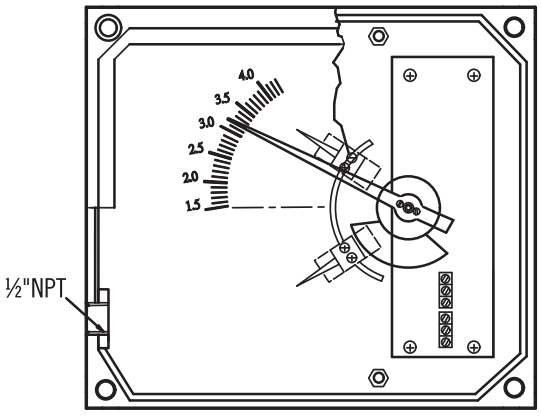

Alarm Switch:
one or two setting points, form A bistable type (N.O. type)

Hysteresis:
±15% of full scale (Dead Band)

Switch Rating:
AC 125V 0.5A / DC 100V 10W / Max. DC 250V < 40 mA

1 adjustable alarm
Contact setting point should be within 20% to 100% of F.S.

Standard Scales

Tube	L/H Water 20°C	NM³/H Air 0°C 1.013bar	A	B	C	BSP/ NPT
OF101	15 ~ 70	–		150		1/4"
OF102	18 ~ 80	0.4 ~ 2		150		1/4"
OF103	20 ~ 100	0.5 ~ 2.5		150		1/4"
OF104	25 ~ 125	0.6 ~ 3.2		150		1/4"
OF105	30 ~ 150	0.75 ~ 3.8		150		1/4"
OF106	40 ~ 210	1 ~ 5		150		1/2"
OF107	60 ~ 330	1.5 ~ 7.5		150		1/2"
OF108	70 ~ 400	1.6 ~ 8		150		1/2"
OF109	120 ~650	3 ~ 15		150		1/2"
OF110	160 ~ 800	4 ~ 20		150		1/2"
OF111	190 ~ 950	4.8 ~ 24		150		1/2"
OF112	300~1500	6.4 ~ 32		150		1/2"
OF113	200~1000	8 ~ 40		150		3/4"
OF114	350 ~ 1900	10 ~ 50		150		3/4"
OF115	500 ~ 2700	13 ~ 65		150		3/4"
OF116	700 ~ 3500	18 ~ 90		150		1"
OF117	800 ~ 6000	20 ~ 150		150		1"
OF118	800 ~ 6000	20 ~ 150		160		1 1/2"
OF119	900 ~ 7000	23 ~ 175		160		1 1/2"
OF120	2000~ 14000	70~ 350		160		1 1/2"
OF121	1500 ~ 20000	100 ~ 500		160		2"
OF122	2000 ~ 16200	50 ~ 400		160		2 1/2"
OF123	3000 ~ 30000	140 ~ 740		160		2 1/2"

Flow Direction Type

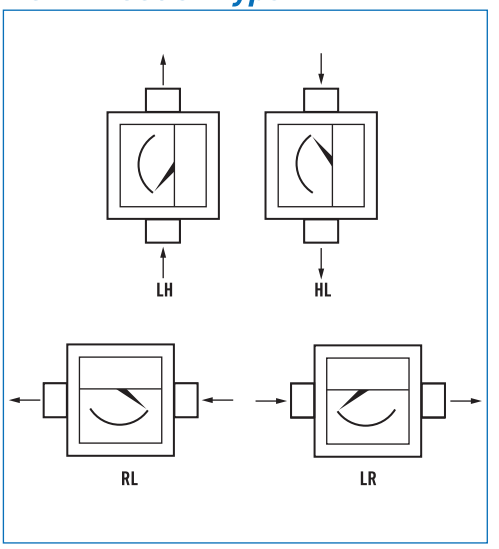

Ordering Information

OF100	Code	Type		
	NS	Indicating only (Aluminum alloy)	ES	Indicating only (SS316)
	CS	With Inductive Switch		
	MS	With Micro Switch		
	RS	With Reed Switch		
	GT	Indicating+4~20mA (no alarm switch available)		
	GTA	**Hall Sensor Type** / Indicating+4~20mA (no alarm switch available)		
	GTH	**HART Type** / Indicating+HART [4~20mA / Intrinsically Safe (EExiaIICT6)], no alarm switch available		

Code	Switch		
O	Without alarm switch		
C1	One inductive alarm switch	C2	Two inductive alarm switches
M1	One micro alarm switch	M2	Two micro alarm switches
R1	One reed switch		

Code	Body Material		
A	SS316	B	Option

Code	Connection Type
	(O) Thread Connection
	(5) JIS 5K **(10)** JIS 10K **(20)** JIS 20K
	(15) ANSI 150# **(30)** ANSI 300#
	(40) ANSI 400# **(60)** ANSI 600#
	(T) Other:_____

Code	Connection Size
	(1) ¼" **(2)** ½" **(3)** ¾" **(4)** 1"
	(5) 1½" **(6)** 2" **(7)** 2½"

Code	Housing Protection / Material
A	IP66
C	***(Ex. Certificate on Housing only)*** / Aluminum alloy Class I, Groups B, C & D; Class II, Groups E, F & G; NEMA 4, 7, 9
D	***(Taiwan Explosion Proof Certification)***/Aluminum alloy Ex d IIB + H_2 T6 Gb
D1	***(Taiwan Explosion Proof Certification)***/ SS316 Ex d IIB + H_2 T6 Gb
X	***(Europe Union ATEX Certification)*** / Aluminum alloy II 2 G D Ex db IIB + H_2 T6 Gb Ex tb IIIC T85°C Db

Code	Flow Direction		
0	LH	5	HL
10	RL	20	LR

Code	Flow Direction
G	Gas
O	Oil
L	Liquid

Code	Range
S	Standard Range

Code	Conduit
N	Without
1	½"NPT(F)
2	Option

OF100						+				

WWW.NEW-FLOW.COM • TEL: 886-7-8135500 • FAX: 886-7-8225588 • Email: info@new-flow.com